INNO OPTOELECTRONICS LIMITED
海 科 光 電 有 限 公 司
http://www.inno-opto.com
email: mktg@inno-opto.com

ITEM NO.:	INO-T004RT
Lens Material.:	PMMA
Holder Material .:	PC
Tolerance.:	+/-0.05mm
Operating Temperature range.:	-40 deg/+90 deg

Type : Seoul P4
Angle at 50 % : 18˚
Measurement at 1 meter

Type : Osram Luw_W5AM
Angle at 50 % : 13˚
Measurement at 1 meter

Type : Seoul Z5
Angle to 50 % : 12˚
Measurement at 1 meter

Type : Nichia NS6W183A
Angle to 50 % : 16˚
Measurement at 1 meter

Type : Cree XRE
Angle to 50 % : 12˚
Measurement at 1 meter

Type : Cree XM-L2
Angle at 50 % : 16˚
Measurement at 1 meter

Type : Cree XPG
Angle to 50 % : 12˚
Measurement at 1 meter

Type : Luxeon LXML-PWN1
Angle to 50 % : 13˚
Measurement at 1 meter

INNO OPTOELECTRONICS LIMITED
海 科 光 電 有 限 公 司
http://www.inno-opto.com
email: mktg@inno-opto.com

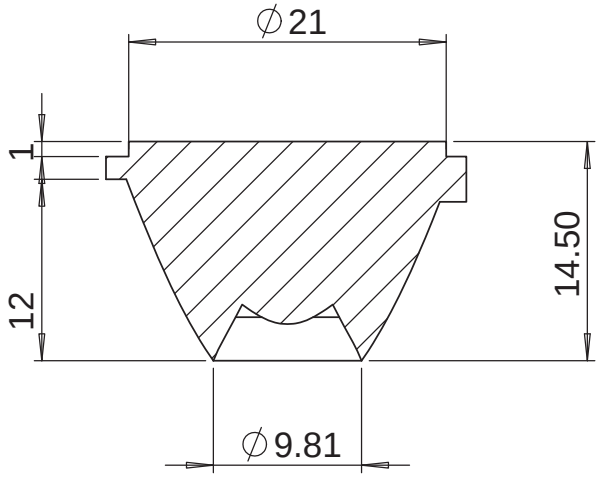

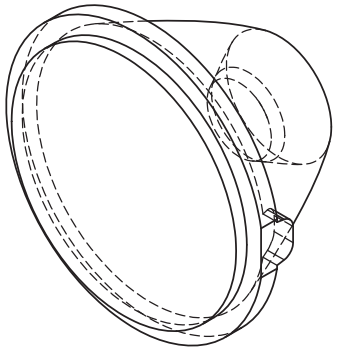

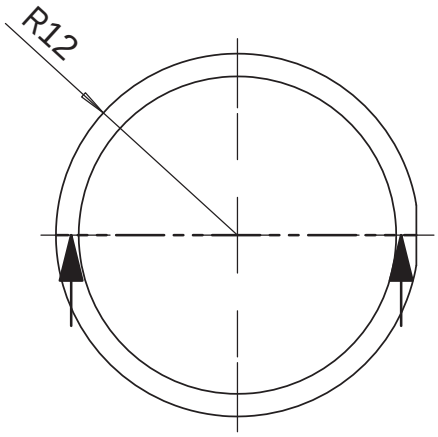

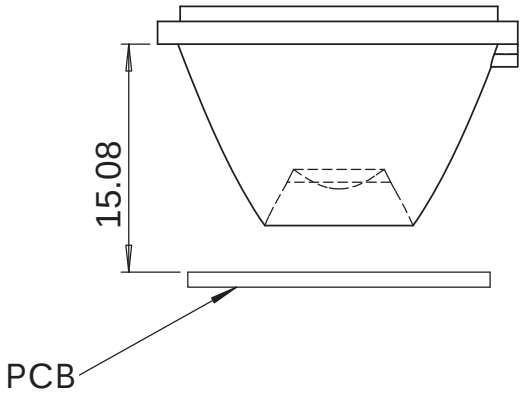

DO NOT SCALE DRAWING	DATE : 2014-01
INNO OPTOELECTRONICS LTD	
TITLE:	
DWG NO. INO-T004RT	A4
SCALE : 2:1	PAGE : 2